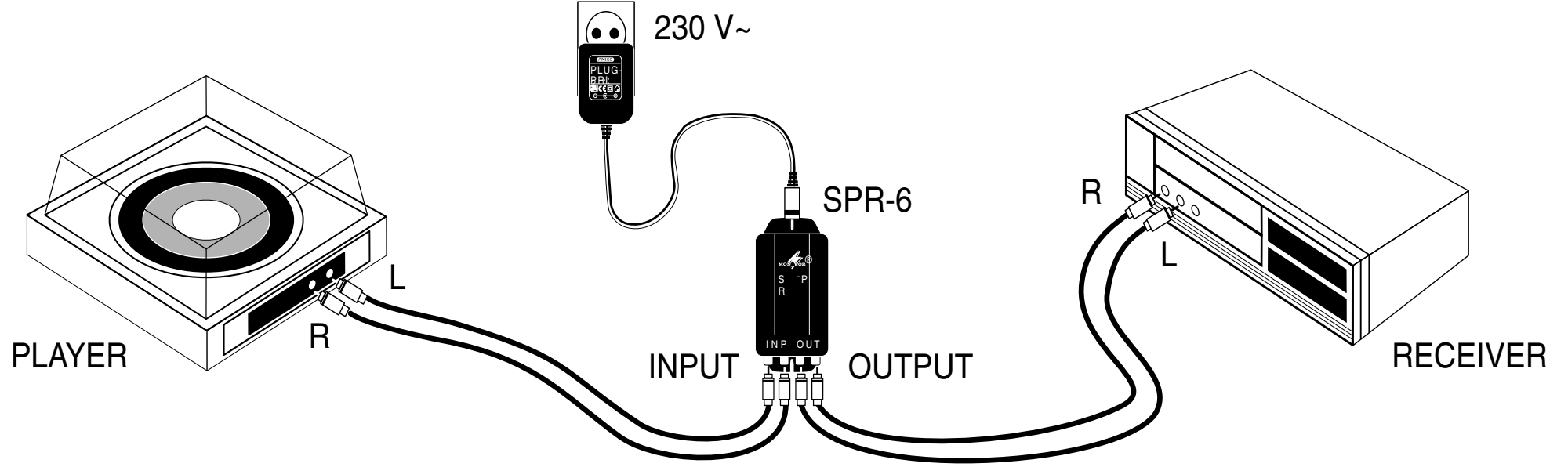
230 V~
PLUG-
SPR-6
S P
R
INP OUT
L
R
PLAYER
INPUT
OUTPUT
R
L
RECEIVER